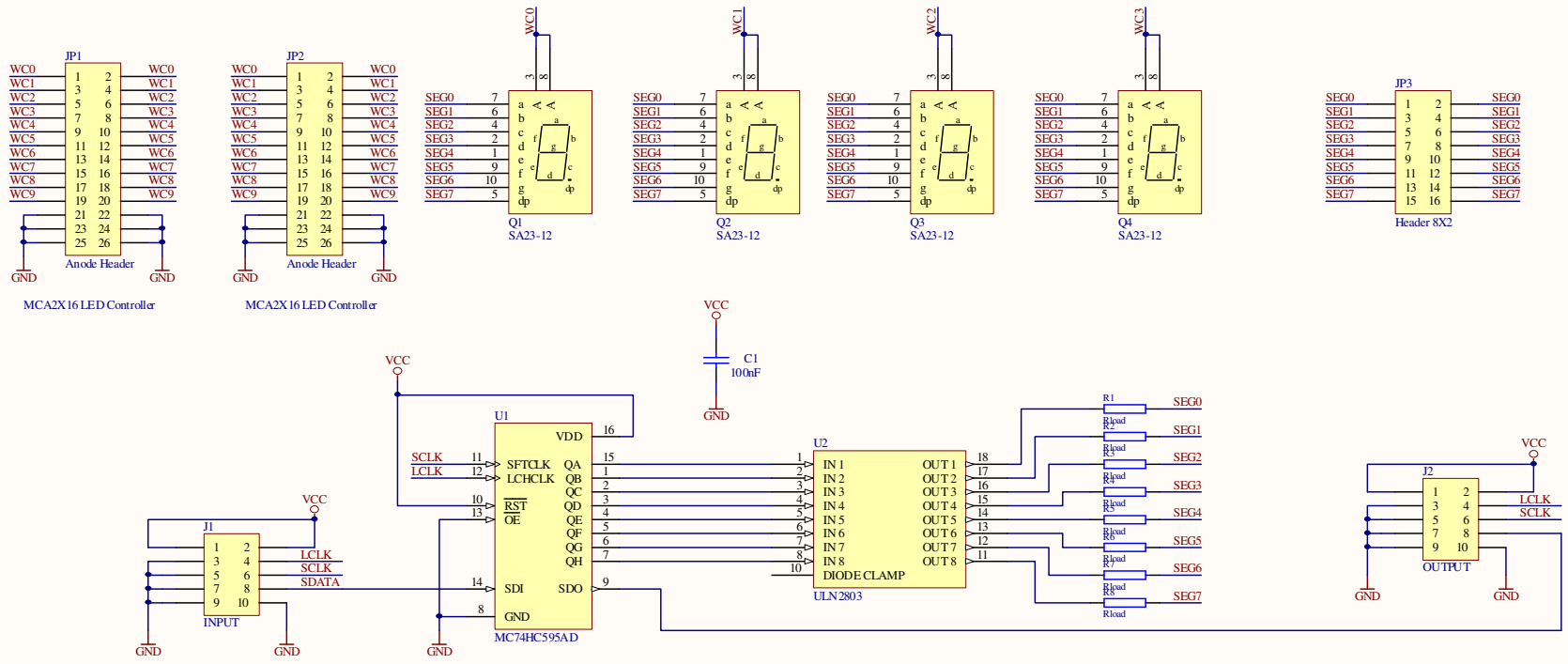
JP1
Anode Header
MCA2X16 LED Controller
JP2
Anode Header
MCA2X16 LED Controller
WC0
WC1
WC2
WC3
Q1
SA23-12
Q2
SA23-12
Q3
SA23-12
Q4
SA23-12
JP3
Header 8X2
SEG0
SEG1
SEG2
SEG3
SEG4
SEG5
SEG6
SEG7
GND
VCC
C1
100nF
U1
MC74HC595AD
VDD
SFTCLK
LCHCLK
RST
OE
SDI
SDO
QA
QB
QC
QD
QE
QF
QG
QH
SCLK
LCLK
U2
ULN2803
DIODE CLAMP
IN 1
IN 2
IN 3
IN 4
IN 5
IN 6
IN 7
IN 8
OUT 1
OUT 2
OUT 3
OUT 4
OUT 5
OUT 6
OUT 7
OUT 8
R1
R2
R3
R4
R5
R6
R7
R8
Rload
J1
INPUT
SDATA
J2
OUTPUT